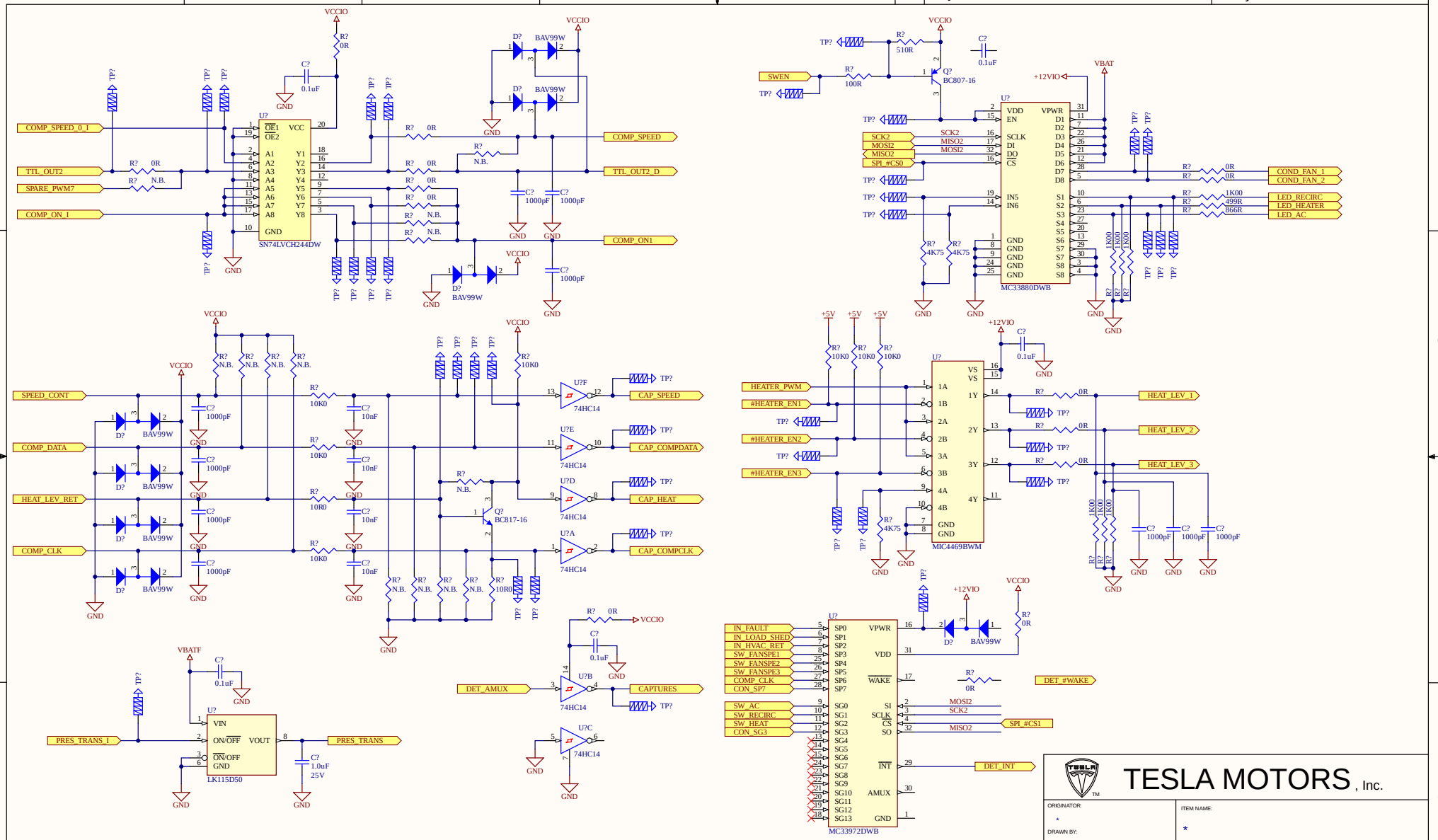
Project:
Lifecycle:
COMP_SPEED_0_I
TTL_OUT2
SPARE_PWM7
COMP_ON_I
SN74LVCH244DW
COMP_SPEED
TTL_OUT2_D
COMP_ON1
SWEN
MC33880DWB
COND_FAN_1
COND_FAN_2
LED_RECIRC
LED_HEATER
LED_AC
SPEED_CONT
COMP_DATA
HEAT_LEV_RET
COMP_CLK
CAP_SPEED
CAP_COMPDATA
CAP_HEAT
CAP_COMPCLK
HEATER_PWM
#HEATER_EN1
#HEATER_EN2
#HEATER_EN3
MIC4469BWM
HEAT_LEV_1
HEAT_LEV_2
HEAT_LEV_3
DET_AMUX
CAPTURES
PRES_TRANS_I
LK115D50
PRES_TRANS
IN_FAULT
IN_LOAD_SHED
IN_HVAC_RET
SW_FANSPE1
SW_FANSPE2
SW_FANSPE3
COMP_CLK
CON_SP7
SW_AC
SW_RECIRC
SW_HEAT
CON_SG3
MC33972DWB
DET_#WAKE
SPI_#CS1
DET_INT
TESLA MOTORS, Inc.
ORIGINATOR:
DRAWN BY:
CHECKED BY:
DATE
ENG APPVL:
ITEM NAME:
ITEM NO.
REVISION:
DATE: 5/21/2021
DO NOT SCALE DRAWING
SHEET * OF *
THE INFORMATION CONTAINED HEREIN IS DEEMED TO BE CONFIDENTIAL, PROPRIETARY, AND A TRADE SECRET OF TESLA MOTORS. THIS INFORMATION MAY NOT BE USED, REPRODUCED, OR DISCLOSED AS THE DIRECT OR INDIRECT BASIS FOR THE DEVELOPMENT, MANUFACTURE, OR SALE OF PROCESSES OR PRODUCTS WITHOUT THE EXPRESSED WRITTEN CONSENT OF TESLA MOTORS.